Florida Engineering LLC
4161 Tamiami Trail, Suite 101, Port Charlotte, FL 33952-9204
www.flengineeringllc.com | Phone: (941) 391-5980
License Number #30782, #60102

Job No. XXXXXXX

Re: Sample Client

Project: Sample Project
123 Sample Street,
Sample City, FL 00000

To Whom It May Concern:

I have analyzed the above-referenced job, specifically the installation of 80" X 102" Hurricane shutter(FL #1700-R4):

Item	Width	Height
	in	in
Hurricane Shutter	80	102

Per my assessment, above Hurricane Shutter is adequately suited to resist the applicable loads. Page 2 shows the opening design pressures and allowable design pressures. Pages 3 and 4 show the special attachment details and the supporting calculations.

All products listed above are to be installed as per the product approval specifications unless noted otherwise. The design is compliant with the Florida Building Code 2023 (8th Edition).

Please let me know if you have any questions or concerns.

Thank you.

Sample PE
Engineer of Record

WIND LOAD CALCULATOR FOR COMPONENTS AND CLADDING

ASCE 7-22 Design Pressures (ASD) for Wall Openings (Windows, Shutters & Doors)

Applicable Codes & Standards

1. 2023 Florida Building Code (8th Edition)
2. ASCE/SEI 7-22: Minimum Design Loads on Buildings and Other Structures.

PROJECT INFORMATION	
Date	
Project No.	XXXXXXX
Project Address	SAMPLE PROJECT
	123 SAMPLE STREET,
	SAMPLE CITY, FLORIDA

GENERAL INPUTS				
Basic Wind Speed	=		170	mph
Exposure Category	=		D	
Enclosure Classification	=		Enclosed	
Roof Pitch	=		3	in 12
Mean roof height	=		22.00	ft
Minimum horizontal building dimension	=		100.00	ft

Sr. No.	Width	Height	Zone	Unit	Design Pressures		FPA No. or NOA No.	Allowable Pressures	
				Elevation	Positive	Negative		Positive	Negative
	in	in		ft	psf	psf		psf	psf
1	80.00	102.00	5	22.00	48.07	-63.57	FL 1700	120.00	120.00
2									
3									
4									
5									
6									
7									
8									
9									
10									
11									
12									
13									
14									
15									
16									
17									
18									
19									
20									

Sr. No.	Width	Height	Zone	Unit	Design Pressures		FPA No. or NOA No.	Allowable Pressures	
				Elevation	Positive	Negative		Positive	Negative
	in	in		ft	psf	psf		psf	psf
21									
22									
23									
24									
25									
26									
27									
28									
29									
30									
31									
32									
33									
34									
35									
36									
37									
38									
39									
40									

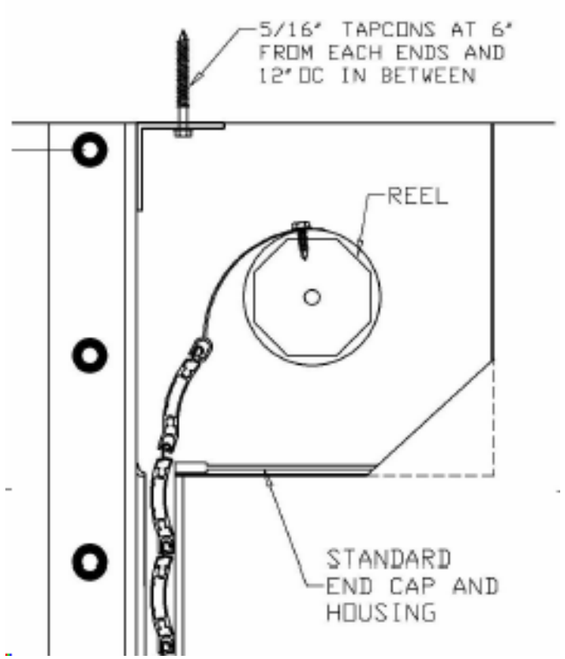
5/16" TAPCONS AT 6"
FROM EACH ENDS AND
12" OC IN BETWEEN
REEL
STANDARD
END CAP AND
HOUSING

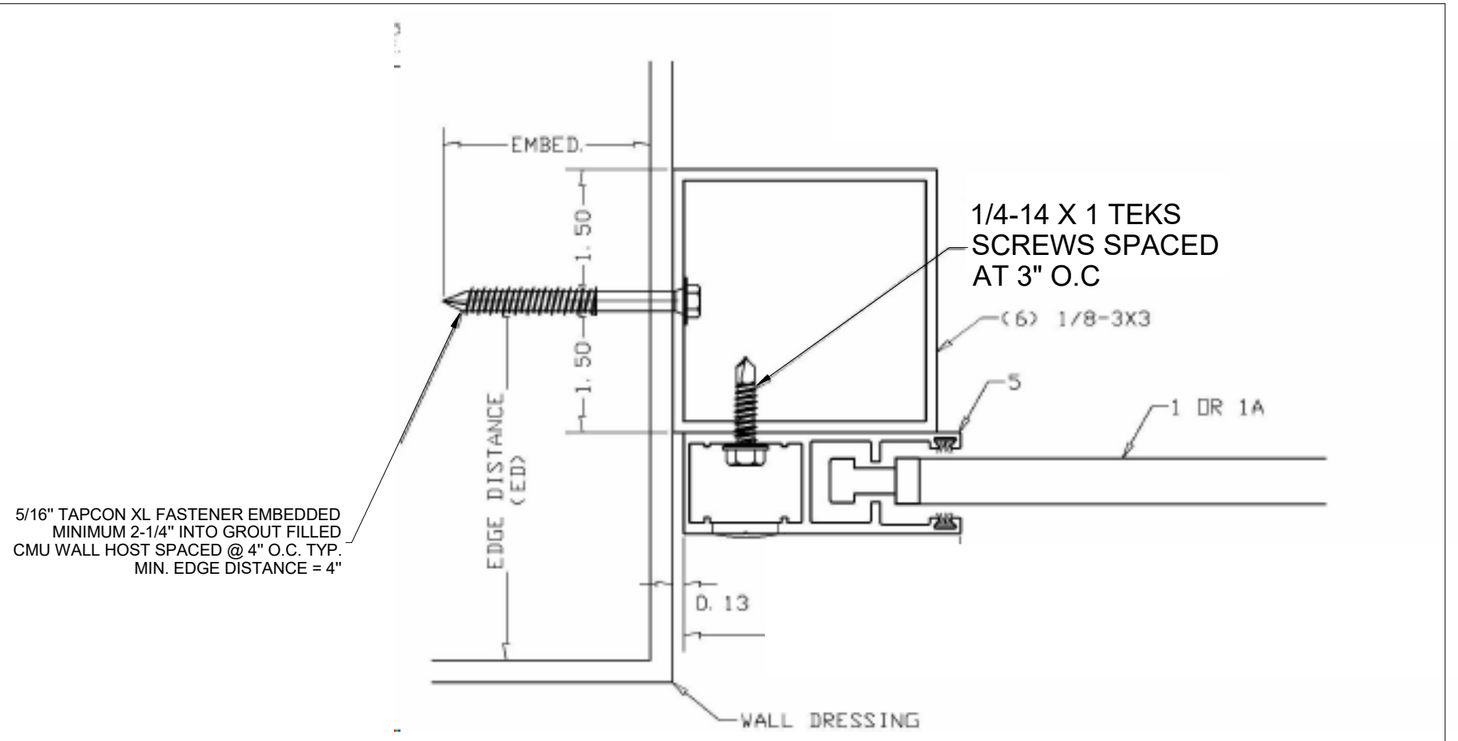
EMBED.
1.50
1.50
EDGE DISTANCE
(ED)
1/4-14 X 1 TEKS
SCREWS SPACED
AT 3" O.C
(6) 1/8-3X3
5
1 OR 1A
D.13
WALL DRESSING
5/16" TAPCON XL FASTENER EMBEDDED
MINIMUM 2-1/4" INTO GROUT FILLED
CMU WALL HOST SPACED @ 4" O.C. TYP.
MIN. EDGE DISTANCE = 4"

Connection Analysis

1. Connection with CMU block

Shutter height, $h := 120 \cdot in$

Shutter width, $b := 80 \cdot in$

Design pressure, $p := 64 \cdot psf$

Forces acting at the Jamb, $V_x := 728 \cdot plf$ $V_y := 426 \cdot plf$

Total Tension at the connection, $T_u := V_x = 728\ plf$

Total Shear at the connection, $V_u := V_y = 426\ plf$

Provide 5/16" Tapcons XL anchors spaced @ 4" o.c. typical embedded minimum 2-1/4" into grout filled CMU host wall

Spacing between anchors, $s := 4 \cdot in$

Edge distance, $e := 4 \cdot in$

Number of anchors, $n := \text{Round}\left(\frac{h - 2 \cdot e}{s}, 1\right) + 1 = 29$

Tapcon® XL Anchors — Ultimate Tension & Shear Values in Concrete Masonry Units

ANCHOR DIA. In. (mm)	MINIMUM DEPTH OF EMBEDMENT In. (mm)	EDGE DISTANCE (Inches)	HOLLOW CORE[1]		GROUT-FILLED[2]	
			TENSION Lbs. (kN)	SHEAR Lbs. (kN)	TENSION Lbs. (kN)	SHEAR Lbs. (kN)
5/16 (7.9)	1-1/4 (31.8)	4	1,045 (4.6)	2,280 (10.1)	1,045 (4.6)	2,280 (10.1)
	1-3/4 (44.5)	4	NOT RECOMMENDED	NOT RECOMMENDED	1,950 (8.7)	2,825 (12.6)
	2-1/4 (57.2)	4	NOT RECOMMENDED	NOT RECOMMENDED	3,770 (16.8)	3,140 (14.0)

Reduced Shear capacity of an anchor, $V_a := 0.25 \cdot 1 \cdot 3140 \cdot lbf = 785\ lbf$

Reduced Tensile capacity of an anchor, $T_a := 0.25 \cdot 1 \cdot 3770 \cdot lbf = 942.5\ lbf$

Combined Check, $\frac{s \cdot V_u}{V_a} + \frac{s \cdot T_u}{T_a} = 0.438$ <1 Hence, Okay.

2. Connection with AL 3" sq tube

a. With SQ 3"tube to Track: (1/4"X14-2-1/2" TEKS SCREW)

Spacing between screws, $s := 3 \cdot in$

Edge distance, $e := 2 \cdot in$

Number of screws, $n := \text{Round}\left(\frac{h - 2 \cdot e}{s}, 1\right) + 1 = 40$

Reduced Shear capacity of an screws, $V_a := 0.25 \cdot 2087 \cdot lbf = 521.75\ lbf$

Reduced Tensile capacity of an screws, $T_a := 0.25 \cdot 1017 \cdot lbf = 254.25\ lbf$

$$\frac{s \cdot V_x}{V_a} + \frac{s \cdot V_y}{T_a} = 0.768$$ <1 Hence, Okay.

Provide 1/4"-14 X 2.5" TEKS SCREWS @ 3" o.c. typical, Edge distance: 2in.